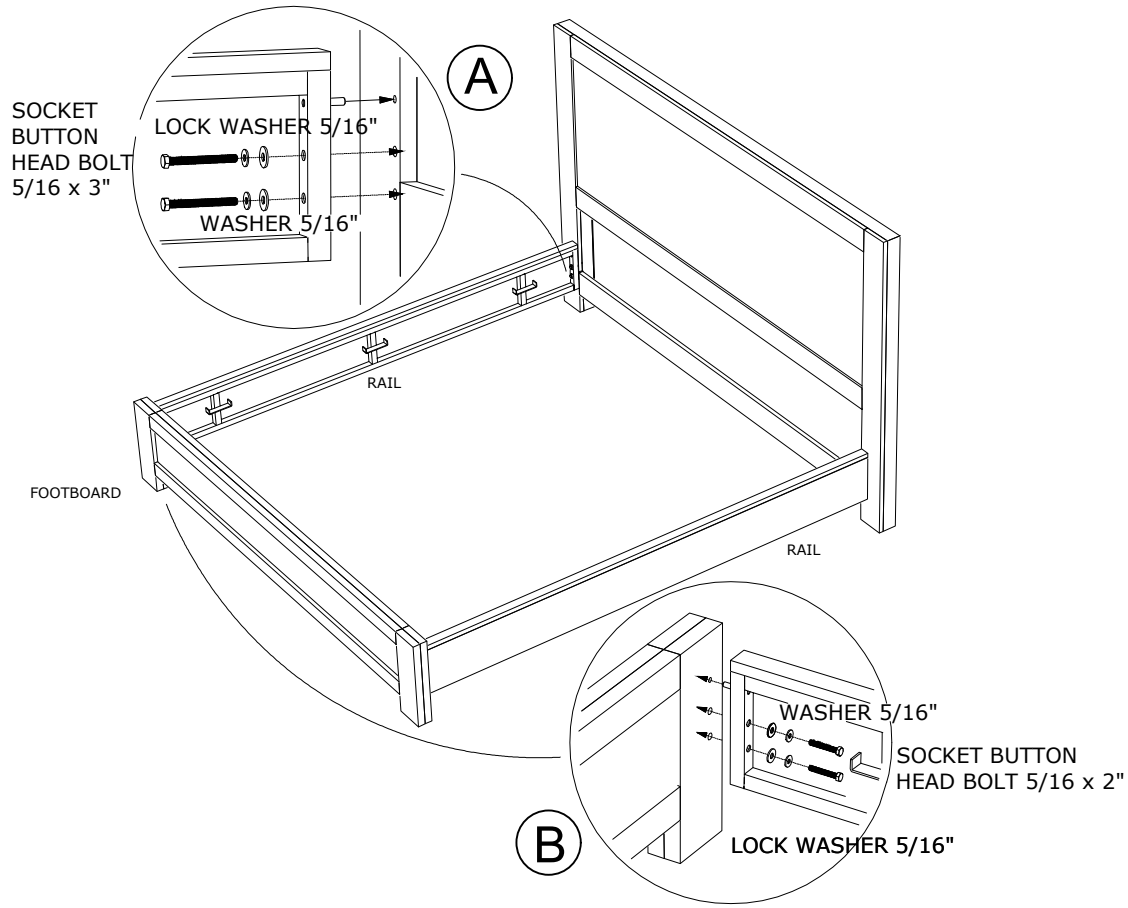

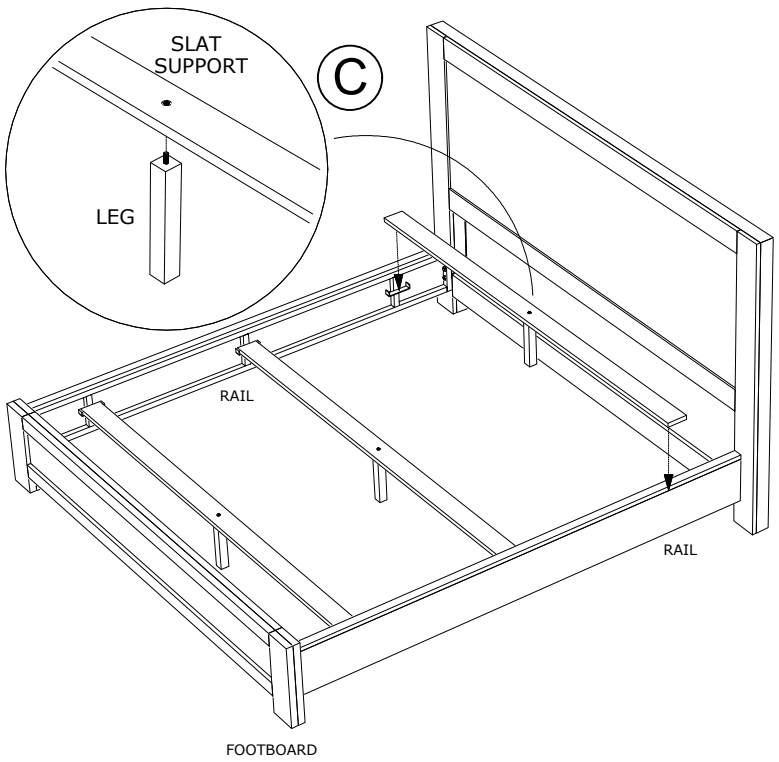

INSTRUCTIONS:

1.- ATTACH THE RAILS AS SHOWN IN IMAGE "A & B"

2.- SCREW THE LEGS TO THE SLAT SUPPORT AS SHOWN IN IMAGE "C" AND PLACE THEM BETWEEN THE RAILS.

HARDWARE	
DESCRIPTION	**#PCS**
SOCKET BUTTON HEAD BOLT 5/16 x 3"	4
SOCKET BUTTON HEAD BOLT 5/16 x 2"	4
WASHER 5/16"	8
LOCK WASHER 5/16"	8
ALLEN KEY 3/16"	1

PRODUCT IMAGE SHOWN IS FOR ILLUSTRATIVE PURPOSES ONLY, SHOULD NOT BE TAKEN AS REFERENCE POINT

ASSEMBLY INSTRUCTIONS

I-PLT-C004