ASSEMBLY INSTRUCTIONS

STEP 1 - POSITIONING AND ALIGNMENT

WITH THE HELP OF SOMEONE, PLACE THE TOP ON A FLAT SURFACE. ALIGN THE LEGS WITH THE HOLES OF THE TABLE APRON.

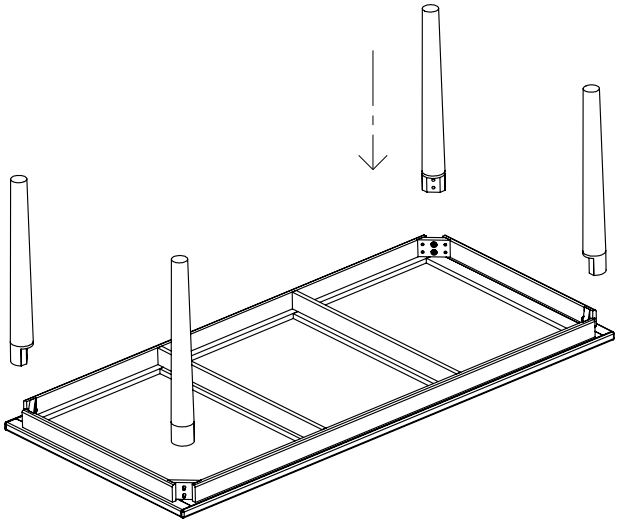

STEP 2 - SECURING THE LEGS

ONCE THE HOLES ARE ALIGNED, INSTALL THE SCREWS AND WASHERS AS SHOWN IN DETAIL A. TIGHTEN THE SCREWS SECURELY. REPEAT THIS PROCESS FOR THE REMAINING LEGS.

STEP 3 - FINAL PLACEMENT

FINALLY, WITH THE HELP OF SOMEONE TURN THE DINING TABLE AND PLACE IT IN YOUR DESIRED LOCATION.

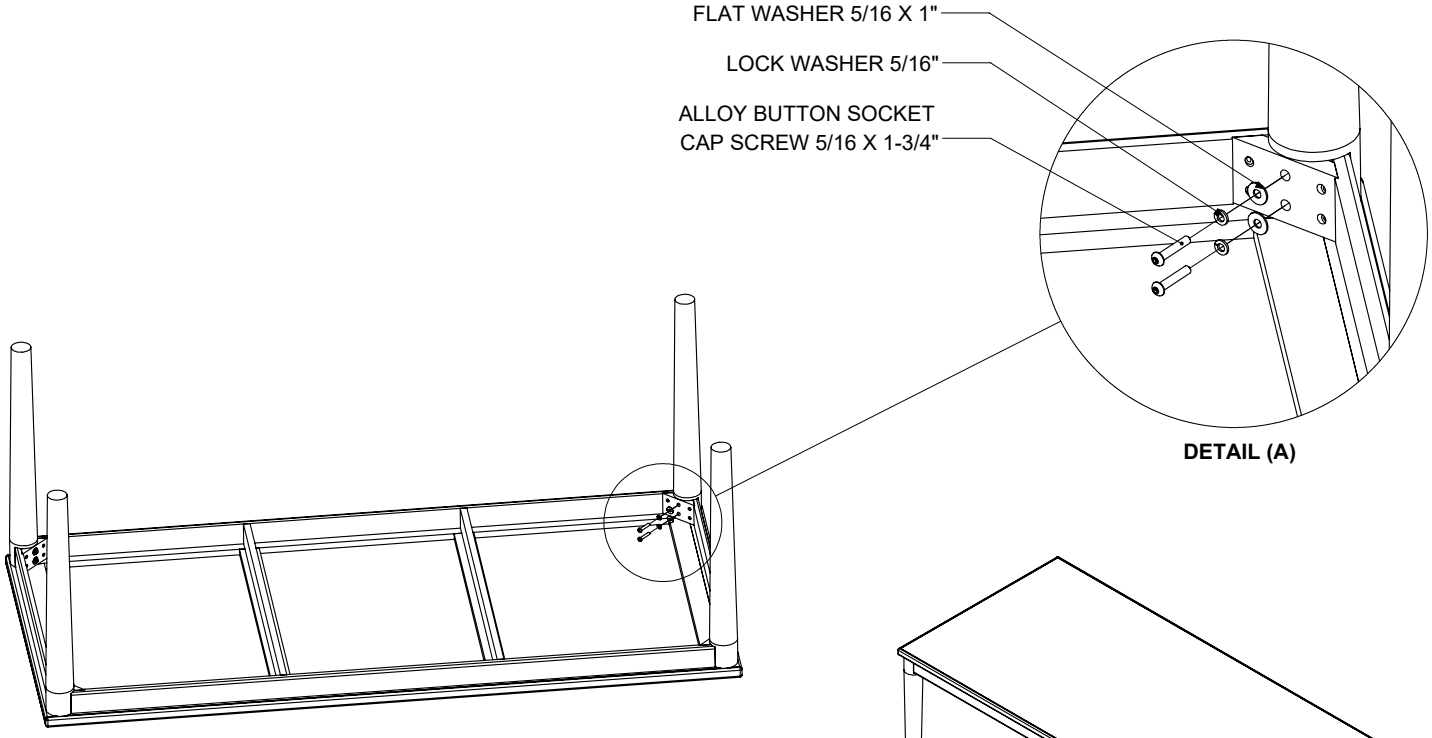

DETAIL (A)

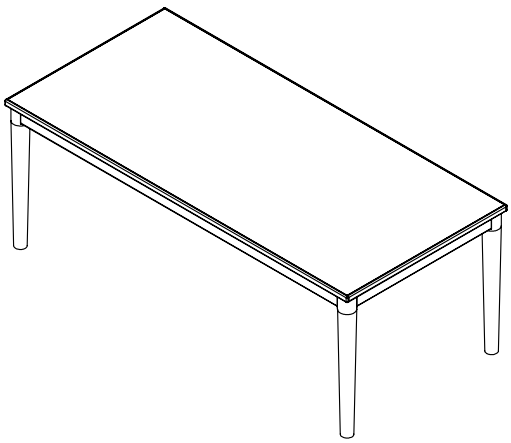

DESCRIPTION	#
ALLOY BUTTON SOCKET CAP SCREW 5/16 X 1-3/4"	8
LOCK WASHER 5/16"	8
FLAT WASHER 5/16 X 1"	8
HEX KEY 5/32"	1